4. Introduction of a new fuel pump assy. part no. 893115 for ROTAX® 912 Series

4.1) General Information

(see fig. 1 to fig. 7)

In the course of continuous development a fuel pump assy. (part no. 893110 and/or part no. 893114) has been already introduced.

The fuel pump assy. part no. 893110 and part no. 893114 has been already installed on the following engines:

- 912 A from of S/N 4,410.906
- 912 F from of S/N 4,412.990
- 912 S from of S/N 4,924.185
- 912 UL from of S/N 6,770.279
- 912 ULS from of S/N 6,778.296

In the course of standardization a new "basic" fuel pump assy. (part no. 893115) has been introduced, which can be configurated with the appropriate nipples or fuel hoses.

The new fuel pump assy. part no. 893115 has already been installed on the following engines:

- 912 A from of S/N 4,410.977 inclusive
- 912 F from of S/N 4,413.018 inclusive
- 912 S from of S/N 4,924.497 inclusive
- 912 UL from of S/N 6,770.893 inclusive
- 912 ULS from of S/N 6,781.191 inclusive

parts requirement:

Fig item no	New part no	Qty per engine	Description	Old part no	application
-	893115	1	fuel pump assy.	892546	912 with isolating flange (gasket) and O-ring
-	950228	1	isolating flange (gasket)	-	fuel pump assy.
-	631870	1	O-ring	-	fuel pump assy.
-	874337	1	fuel hose assy.	-	fuel pump assy. (fuel outlet)
-	874347	1	fuel hose assy.	-	fuel pump assy. (fuel inlet)
-	250425	2	gasket ring 10.2/15/1.5	-	fuel pump assy.
-	840740	1	nipple 7/3.8	-	fuel pump assy. (fuel outlet)
-	840745	1	nipple 9/5.7	-	fuel pump assy. (fuel inlet)
-	840770	1	adapter AN-5 (9/16 UNF)/M10x1	-	fuel pump assy. (fuel inlet)
-	840775	1	adapter AN-6 (1/2 UNF)/M10x1	-	fuel pump assy. (fuel outlet)
-	942674	2	hex. nut M8	-	fuel pump assy.
-	-	2	lock washer A8	945752	fuel pump assy.

◆ NOTE: In case of an upgrade the parts listed above have to be used, the fuel pump must be installed using the new isolating flange (gasket). Ammendments concerning service or installation need to be adhered to. Proof of certification to the latest requirements such as FAR or EASA has to be supplied by the aircraft manufacturer.

◆ NOTE: Through this configurability the two fuel pumps (part no. 893110 and part no. 893114) are no longer available and can be composed of the following parts.

Copyright - BRP-Powertrain GmbH & CO KG. All rights reserved.

Fuel pump part no. 893110 include following parts:		
Part no.	Qty	Description
893115	1	fuel pump assy.
950228	1	isolating flange
631870	1	O-ring
840740	1	nippel 7/3.8 (pump outlet)
840745	1	nippel 9/5.7 (pump inlet)
250425	2	gasket ring 10.2/15/1.5

Fuel pump part no. 893114 include following parts:		
Part no.	Qty.	Description
893115	1	fuel pump assy.
950228	1	isolating flange
631870	1	O-ring
874337	1	fuel hose
874347	1	fuel hose
250425	2	gasket ring 10.2/15/1.5
840770	1	adapter AN-5 (9/18 UNF)/M10x1 (pressure hose)
840775	1	adapter AN-6 (1/2-20 UNF)/M10x1 (suction hose)

4.2) Retrofit of fuel pump assy. part no. 893110 to part no. 893115

(see fig. 1)

Connecting to fuel pump:

Pump inlet (3):

nipple..... 9/5.7

tightening torque..... 10 Nm (90 in.lb)

Pump outlet (2):

nipple 7/3.8

tightening torque..... 10 Nm (90 in.lb)

B LOCTITE 243

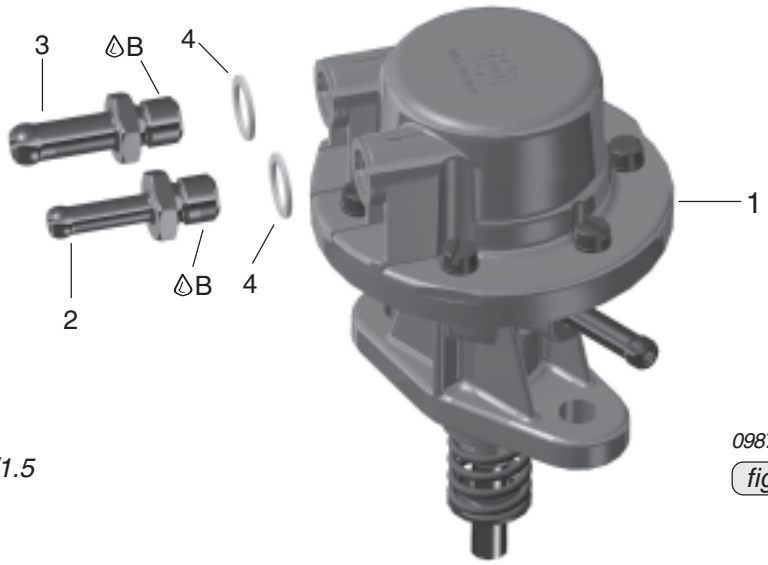

1 fuel pump assy.
2 nipple 7/3.8
3 nipple 9/5.7
4 gasket ring 10.2/15/1.5

09875

fig. 1

Copyright - BRP-Powertrain GmbH & CO KG. All rights reserved.

4.3) Retrofit of fuel pump assy. part no. 893114 to part no. 893115

(see fig. 2)

Connecting to fuel pump:

Pump inlet (3):

adapter ..... AN-6 (1/2-20 UNF)/M10x1

tightening torque..... 10 Nm (90 in.lb)

Pump outlet (2):

adapter..... AN-5 (9/16-18 UNF)/M10x1

tightening torque..... 10 Nm (90 in.lb)

Connecting fuel hoses to adapter:

Pump inlet (4):

fuel hose assy. .....AN-6 connection

tightening torque..... 32 Nm (23.6 ft.lb)

Pump outlet (5):

fuel hose assy. .....AN-5 connection

tightening torque..... 27 Nm (20 ft.lb)

■ CAUTION: Counterhold the adapter during tightening.

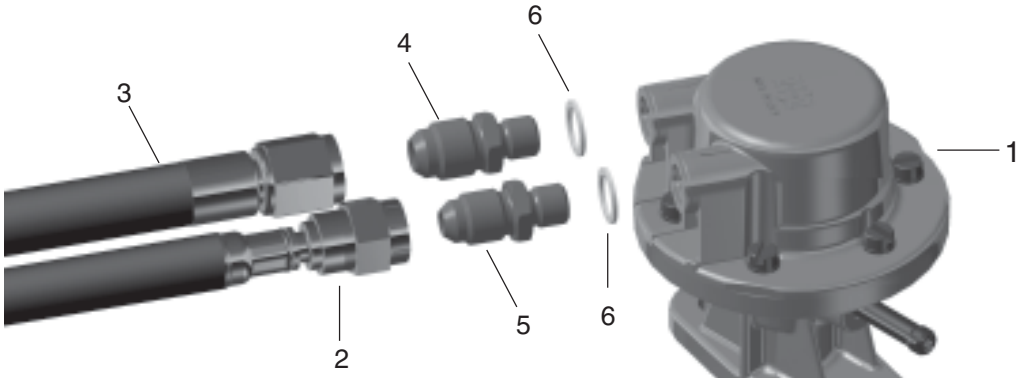

09874

fig. 2

1 *fuel pump assy.*
2 *fuel hose assy. (fuel outlet)*
3 *fuel hose assy. (fuel inlet)*
4 *adapter AN-6 (1/2-20 UNF)/M10x1 (fuel inlet)*
5 *adapter AN-5 (9/16-18 UNF)/M10x1 (fuel outlet)*
6 *gasket ring 10 .2/15/1 .5*

Detail:
Lubricate with grease to the adapter thread

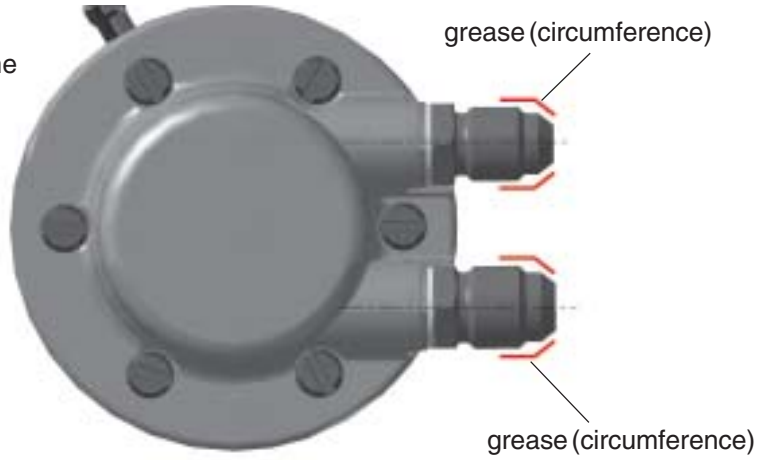

Copyright - BRP-Powertrain GmbH & CO KG. All rights reserved.

4.4) Changes concerning installation

(see fig. 3 and fig. 4)

Operating limits

See latest Operators Manual.

Fuel pressure:

max.....0.5 bar (7.26 psi)*

min.....0.15 bar (2.2 psi)

* only applicable for fuel pump part no. 893110, part no. 893114 and part no. 893115.

◆ NOTE: In case of an engine replacement or retrofitting it is important to adjust the operating limits of the instrument.

Proof of certification to the latest requirements such as FAR or EASA has to be supplied by the aircraft manufacturer. For more information and related instruction contact the aircraft and/or airframe manufacturer.

Option 1

Connecting to fuel pump (1) with push-on fittings. See fig. 3.

Pump inlet (2):

outside dia..... 8 mm (0.31 in.)

slip-on length for hose attachment: max. 22 mm (0.87 in.)

Pump outlet (3):

outside dia..... 6 mm (0.25 in.)

slip-on length for hose attachment: max. 22 mm (0.87 in.)

Drainage (4):

outside dia..... 6 mm (0.25 in.)

slip-on length for hose attachment: max. 22 mm (0.87 in.)

■ CAUTION: When mounting the fuel line to the fuel pump make sure that the fuel pump is not exposed to excessive force.

■ CAUTION: Use the maximal possible slip-on length for mounting hose. Secure with appropriate hose clamps. Route the lines without kinks and avoid tight bends.

Option 2

Connecting to fuel pump (1) with attached hoses on the fuel hose. See fig. 4.

Pump inlet (2):

thread (5)..... AN 5-(9/16-18 UNF)

tightening torque: 15 Nm (135 in.lb)

Pump outlet (3):

ring hose nipple/fitting (6)..... 3/4 DIN 7642

tightening torque: 15 Nm (135 in.lb)

Drainage (4):

outside dia..... 6 mm (0.25 in.)

slip-on length for hose attachment: max. 22 mm (0.87 in.)

■ CAUTION: Route the lines without kinks and avoid tight bends.

■ CAUTION: Drainage line have to be routed into a ram-air and vacuum free zone, according to the requirements and release of BRP-Powertrain. The drainage line must not be routed into the slipstream. Ram pressure or vacuum impair the fuel pressure.

- The drainage line has to be installed in such a way that the excessive fuel/oil flows off.
- The installed drainage line must have a continuous slope downwards.
- The drainage line must be protected against any kind of blockage (e.g. formation of ice).

■ CAUTION: If a auxiliary electrical fuel pump is used a check valve (part no. 874532) should be used.The check valve must have a low cracking pressure and must be installed in a parallel circuit as per the Installation Manual 912/914 Series.

■ CAUTION: Use the pilot jet (part no. 963820) of the fuel pressure line to the fuel return line. See latest Installation Manual 912/914 Series.

Copyright - BRP-Powertrain GmbH & CO KG. All rights reserved.

4.5) Changes concerning maintenance

(see fig. 3 to fig. 5)

4.5.1) Maintenance checks

See latest Maintenance Manual (Line), maintenance checklist.

- Due to manufacturer specification of the fuel pump, fuel pump must be replaced every 5 years.

■ CAUTION: The 5 year limitation is applicable to all mechanical fuel pumps (Corona, Pierburg and Bing).

- Besides inspection of the fuel lines also the drainage hose (12) (if applicable) must be inspected - check all hoses for damage, leakage, hardening by heat, porosity, loose fittings, secure mounting and sharp bends.

4.5.2) Removal of the fuel pump

See latest Maintenance Manual (Heavy).

■ CAUTION: Replace the isolating flange (gasket) on reinstallation of the fuel pump. It is also required to replace the O-ring at every installation.

4.5.3) Inspection of the fuel pump

See latest Maintenance Manual (Heavy).

■ CAUTION: The fuel pump cover (11) must not be opened. The safety marks has to be intact.

■ CAUTION: The connecting fittings (2,3) must be checked for secure mounting and leakage. If the fittings or the fuel hoses (13,14) have to be removed, clean and reinstall with new gasket ring and LOCTITE 243 and a tightening torque of 10 Nm (90 in.lb).

Fuel pressure

The fuel pressure must not exceed max. 0.5 bar (7.26 psi). The pressure and functional efficiency of the fuel system can be checked with the new fuel pressure gauge kit part no. 874234 or equivalent calibrates test gauge.

■ CAUTION: The fuel pressure gauge kits part no. 874231/ 874233 shows the minimum and maximum allowable fuel pressure. At the new fuel pressure gauge kit part no. 874231 this limits have been adjusted accordingly to 0.15 bar (2.2 psi) to 0.5 bar (7.26 psi).

4.5.4) Installation of the fuel pump

See latest Maintenance Manual (Heavy).

■ CAUTION: It is necessary to use a new insulating flange (gasket) and a new O-ring. Do not reuse the old isolating flange or the old O-ring.

◆ NOTE: On the mating surfaces of the gearbox housing and the fuel pump flange no sealant is necessary.

Install fuel pump with new insulating flange (7) and O-ring (8). Secure and tighten equally the hex screw-nuts M8 (9) with lock washer A8 (10) using LOCTITE 243 - apply a torque of 15 Nm (135 in.lb).

◆ NOTE: LOCTITE 243 has to be re-applied on each (re-)assembly of the fuel pump.

Reconnect fuel lines.

Conduct test run including ignition check and leakage test.

Copyright - BRP-Powertrain GmbH & CO KG. All rights reserved.

4.6) Appendix

the following drawings should convey additional information

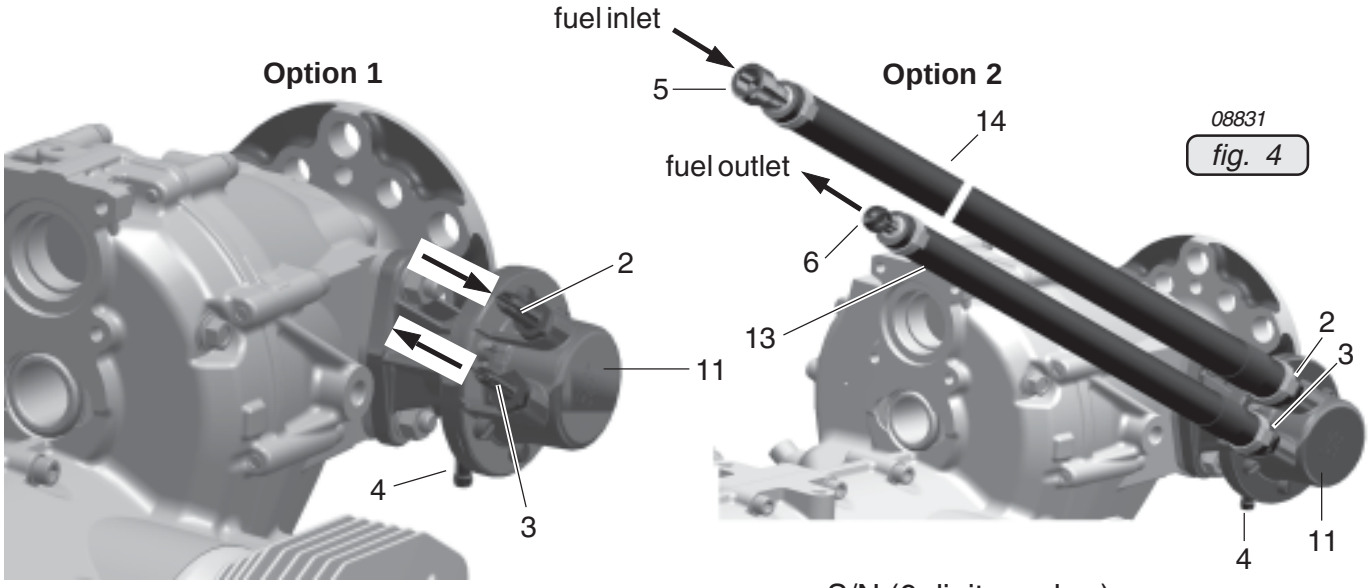

08831
fig. 4

08829
fig. 3

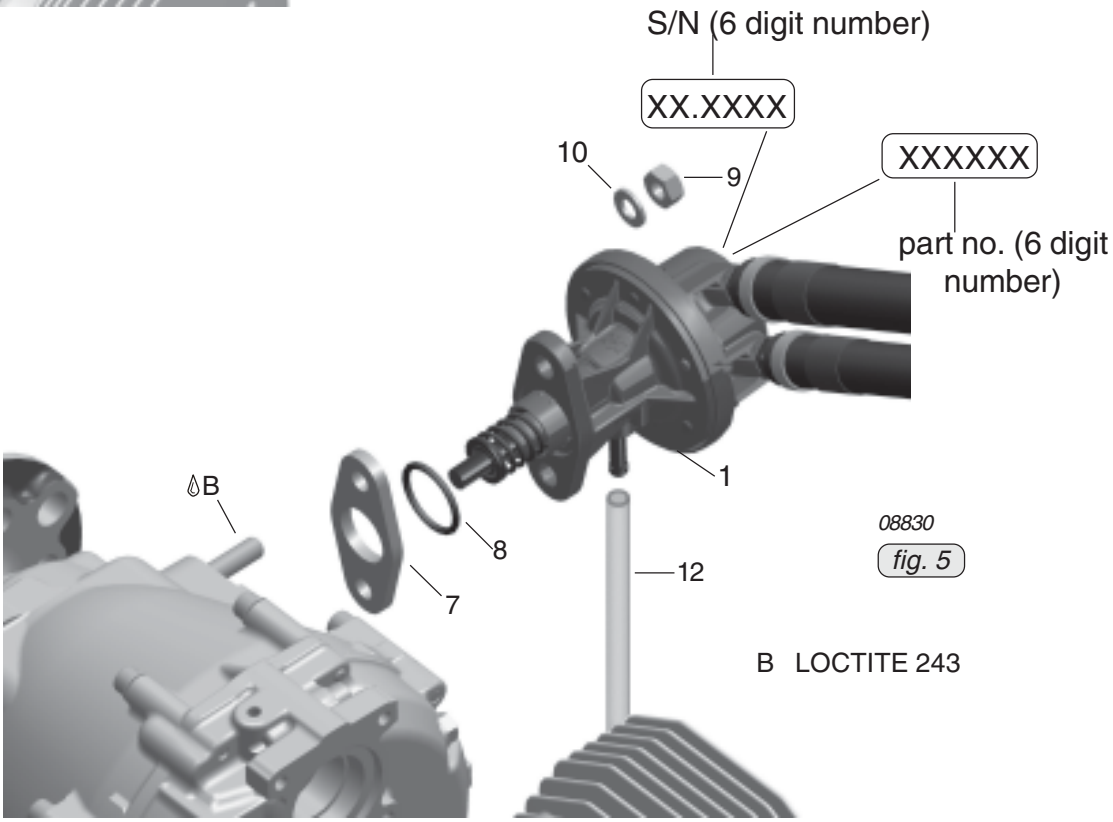

08830
fig. 5

B LOCTITE 243

1	*fuel pump*	11	*fuel pump cover*
2	*connecting fitting (fuel inlet)*	12	*drainage hose*
3	*connecting fitting (fuel outlet)*	13	*fuel hose (fuel outlet)*
4	*drainage*	14	*fuel hose (fuel inlet)*
5	*thread*		
6	*ring hose nipple/fitting*		
7	*insulating flange (gasket)*		
8	*O-ring*		
9	*hex nut M8*		
10	*lock washer A8*		

Copyright - BRP-Powertrain GmbH & CO KG. All rights reserved.

fuel pump assy. part no. 893110
Dimensions without tolerance ± 0.3 mm (0.012 in.)

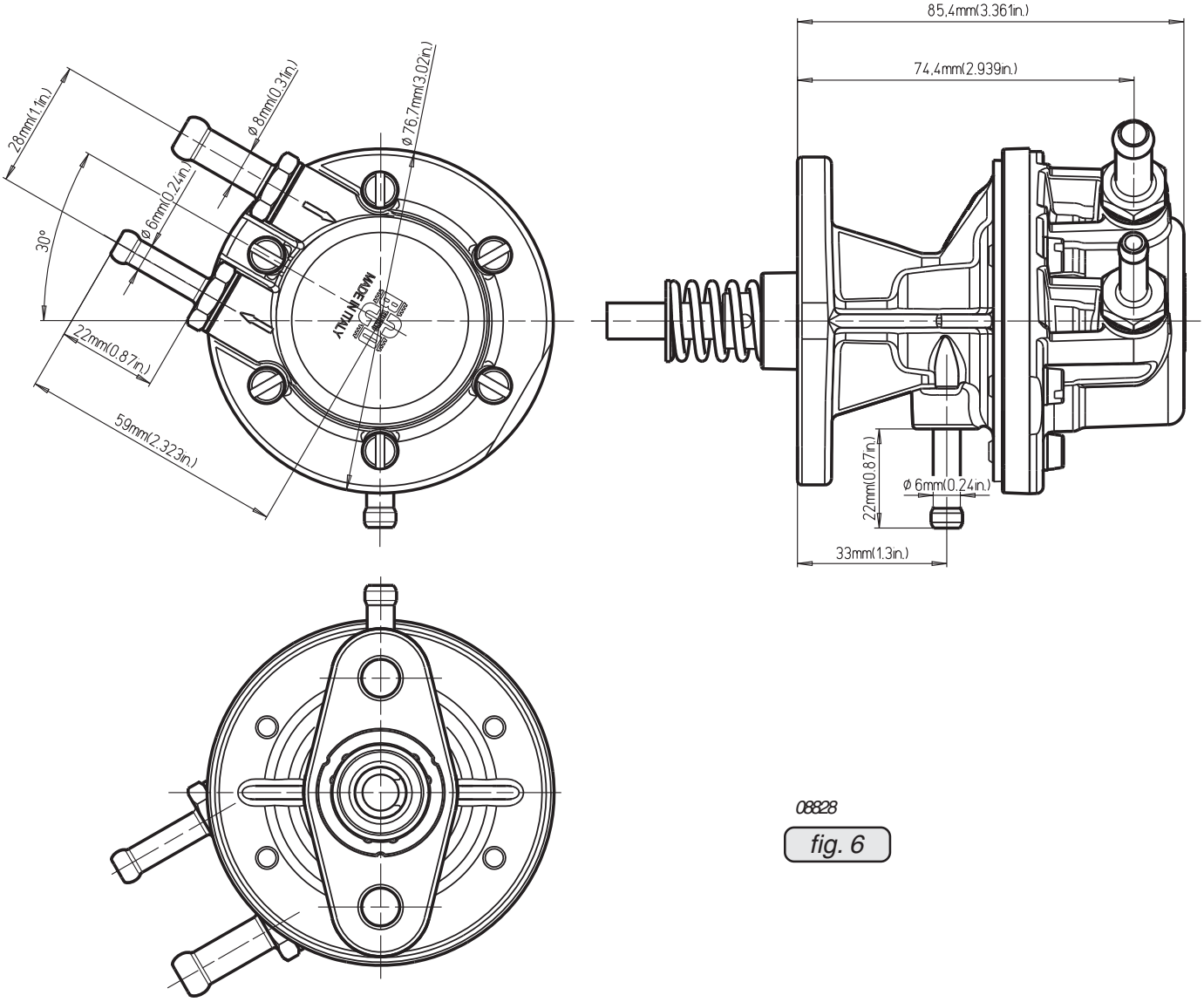

fig. 6

Copyright - BRP-Powertrain GmbH & CO KG. All rights reserved.

Dimensions without tolerance ± 0.012 in.

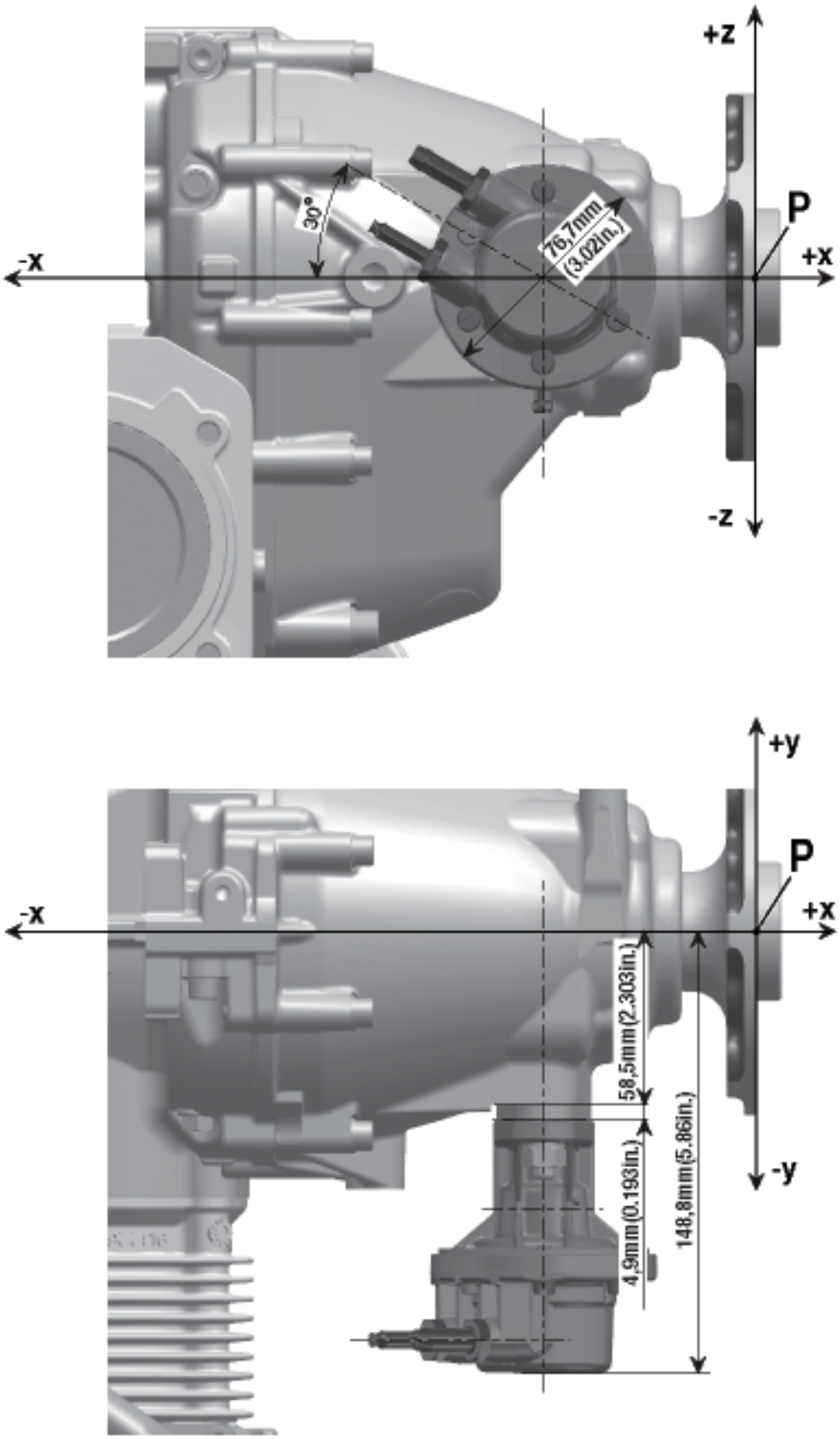

08828

fig. 7

Copyright - BRP-Powertrain GmbH & CO KG. All rights reserved.